XV513G

Project	
Item	
Quantity	
Date	

Model
CHEFLUX™

Combi oven	Gas
7 trays GN 1/1	Hinge on the left side
Knob	
Voltage: 220-240V 1~	

Description

Dry air-steam combi oven with analogical control and 304 stainless steel cooking chamber. Time, temperature, steam percentage and 2 fan speeds function. Allows to perform traditional cooking processes such as steaming, browning, grilling, frying and cooking of fresh and frozen bakery products.

Standard cooking features

Manual cooking

- **Temperature:** 80 °C – 260 °C
- Convection and humidity cooking starting from 80 °C

Key features

- Cooking chamber in high-resistance AISI 304 stainless steel with rounded edges
- Double glass
- Cooking chamber lighting through LED lights embedded in the door
- Tray supports with anti-tip system
- 2-speed fan system and high-performance circular heating elements

Advanced and automatic cooking features

Unox Intensive Cooking

- **DRY.Plus:** rapidly extracts humidity from the cooking chamber
- **STEAM.Plus:** creates instant humidity
- **AIR.Plus:** multiple fans with reverse gear and 2 speed settings

XV513G

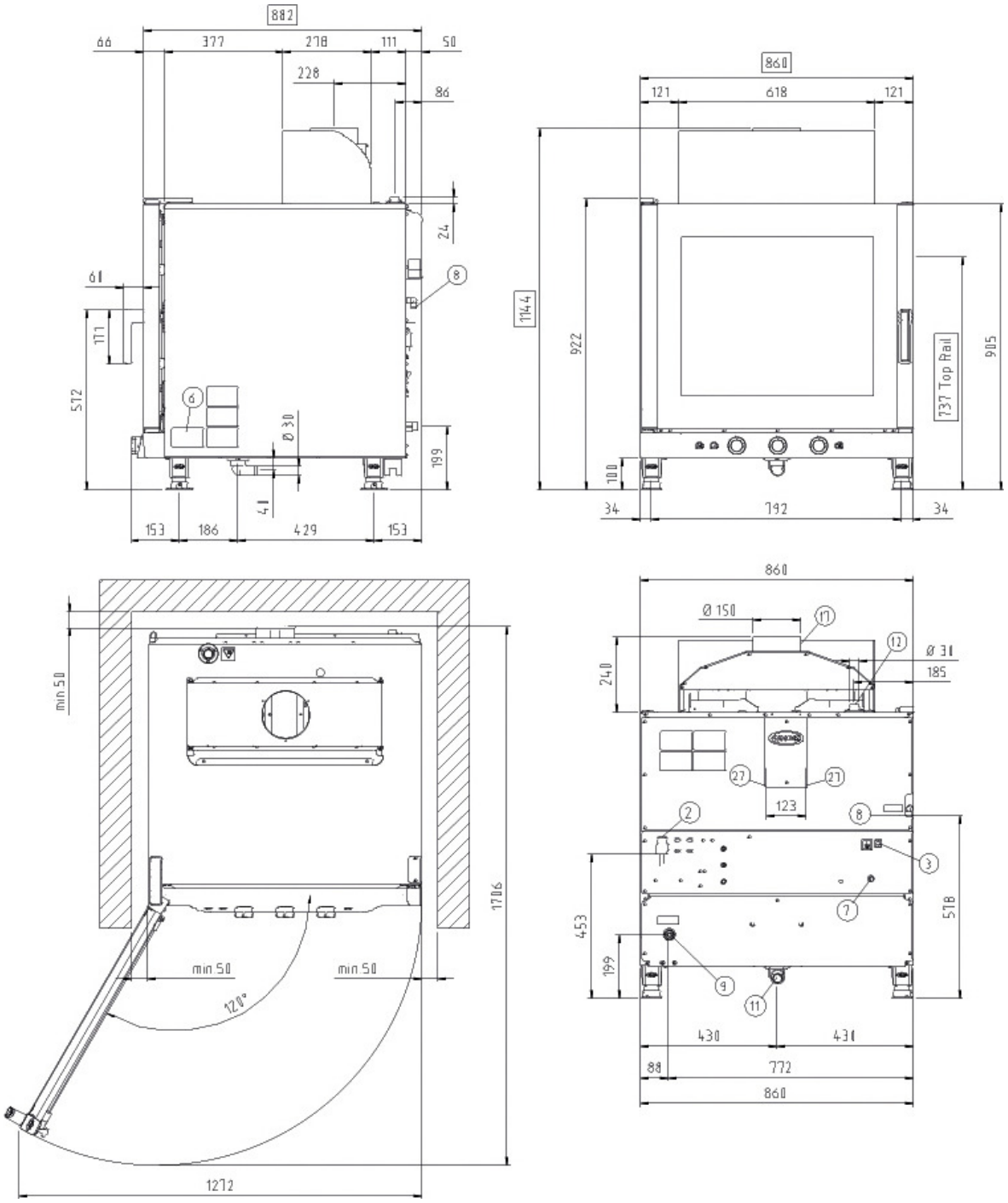

Dimensions and weight	
Width	860 mm
Depth	882 mm
Height	1144 mm
Net weight	100 kg
Tray pitch	67 mm

Connection positions	
2	Terminal board power supply
3	Unipotential terminal
6	Technical data plate
7	Safety thermostat
8	3/4" female NPT water inlet
9	3/4" Gas inlet
11	Chamber drain pipe
12	Hot fumes exhaust chimney
17	Draught switch
27	Cooling air outlet

XV513G

Electrical power supply

STANDARD	
Voltage	220-240 V
Phase	~1PH+PE
Frequency	50 / 60 Hz
Total power	0.7 kW
Max Amp draw	3 A
Required breaker size	10 A
Power cable requirements*	3G x 1,5 mm^2
Plug	Schuko

*Recommended size - observe local ordinance.

Gas power supply

Gas type	Nominal gas power	Inlet pressure	Gas valve orifice	Hook-up
G110	-	-	-	-
G20	17,5 kW	17-25 mbar	335 [1/100 mm]	3/4" male
G25	14,6 kW	20-30 mbar	335 [1/100 mm]	3/4" male
G25.1	-	-	-	-
G25.3	-	-	-	-
G30	17,5 kW	17,5 kW	210 [1/100 mm]	3/4" male
G31	15 kW	25-45 mbar	210 [1/100 mm]	3/4" male

Accessories

- **Cooking Essentials:** special trays
- **Neutral cabinet:** recommended solution to optimize your kitchen layout and always have everything in the right place
- **Stand:** the ideal support for placing your oven at the perfect height to work
- **SPRAY&Rinse:** Practical spray detergent to manually clean all kinds of oven. It degreases and removes all kind of dirt
- **PURE-RO:** Reverse osmosis system that eliminates Chlorides and limescale from water
- **PURE:** resin-based filtering system that eliminates from the water all substances that contribute to the formation of limescale inside the oven cooking chamber

Water Supply

USING A WATER SUPPLY THAT DOES NOT MEET UNOX'S MINIMUM WATER QUALITY STANDARDS WILL VOID ANY WARRANTY.
It is the responsibility of the purchaser to ensure that the incoming water supply is compliant with the listed specifications through adequate treatment measures.

Line pressure:	Drinking water inlet: 3/4" NPT*, line pressure: 22 to 87 psi; 1.5 to 6 Bar (29 psi; 2 Bar recommended)
Inflow water specifications	
Free chlorine	≤ 0.5 ppm
Chloramine	≤ 0.1 ppm
pH	7 - 8.5
Electrical conductivity	≤ 1000 µS/cm
Total hardness	≤ 30° dH
Steam circuit: inflow water specifications	
Chlorides	≤ 120 ppm
Total hardness	≤ 8 °dH

To avoid the formation of limescale the incoming water must have total hardness ≤ 8°dH.

Installation requirements

Installations must comply with all local electrical systems, particularly as for minimum wire gauge required for field connection, hydraulic and ventilation supply. Exhaust and fume analysis must be performed in case of gas ovens.

Register to DDC Service to access data and product specifications.
www.ddc.unox.com